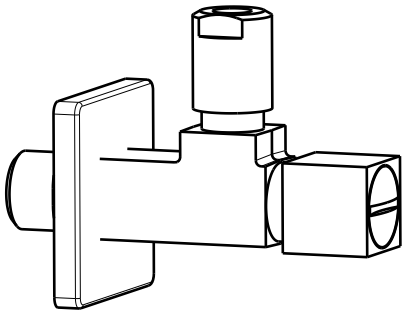

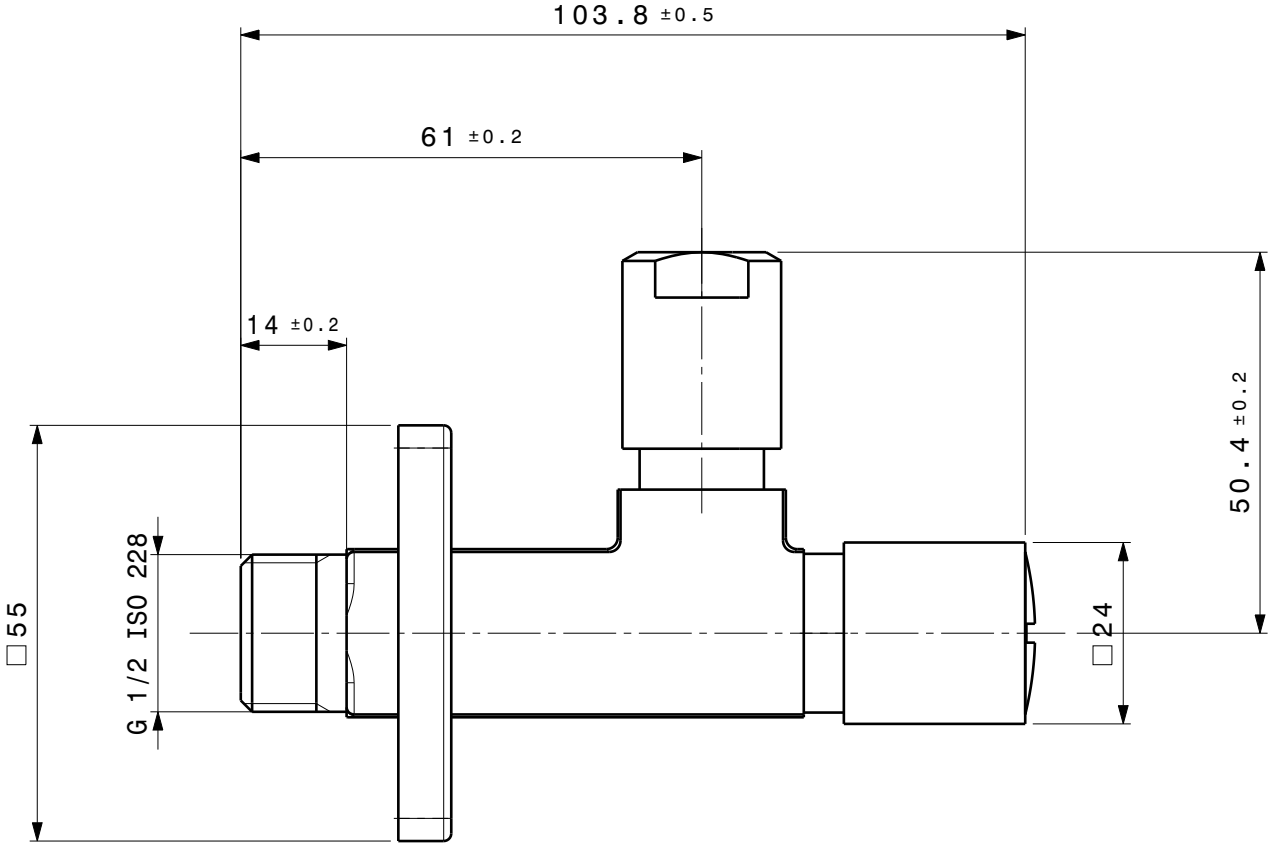
103.8 ±0.5
61 ±0.2
14 ±0.2
50.4 ±0.2
□55
G 1/2 ISO 228
□24